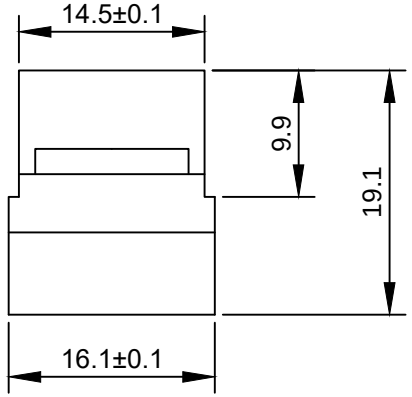

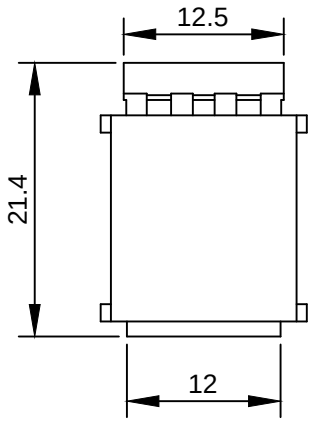

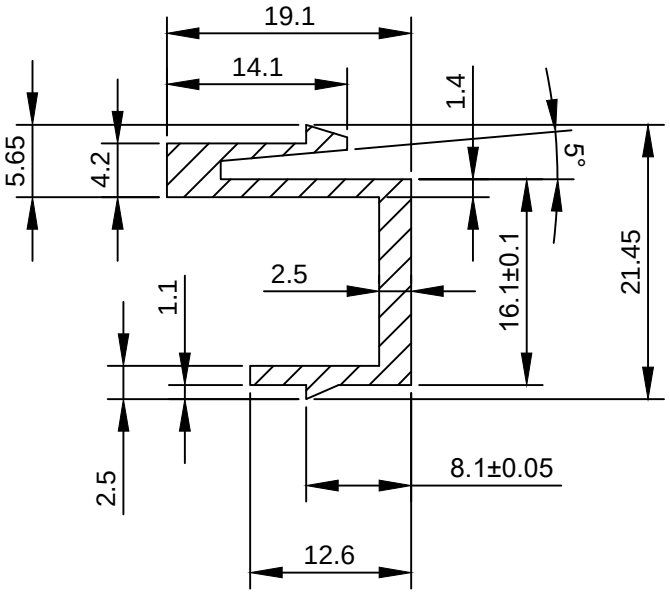

NOTES:

1. ABS Black
2. Packing:1PCS/PE BAG+label
3. ROHS2.0 AND REACH COMPLIANT

		NEW	2017-05-03	A
BY	CHK	REVISION RECORD MODIFICATIONS	DATE	REV.

SYNERGY 21					
CUSTOMER		ITEM NO.	S215490		
PRODUCT NAME	Keystone blind stopper	manufacture country:	CHINA	UNIT	MM
DRAWNBY	CHECKBY	APPOBY	DATE		
SYNERGY 21	SYNERGY 21	SYNERGY 21	2017-05-03		